Notes: (Unless Otherwise Specified)

1. Waterproof Rate: IP68.
2. Recommend Panel Thickness: 0.8 to 3.0 mm.
3. Recommend Torque: 14~15 Kgf-cm (02)
4. Durability: 100 Cycles Min.
5. DWV: 1400 Vrms.
6. Rated Voltage: 250V AC/DC.
7. Insulation Resistance: 100 MΩ Min.
8. RoHS Compliant.

REV	ECN#	DESCRIPTION OF REVISION	DRAW BY DATE	CHECK BY DATE	APPROVE BY DATE
02	ECN-200821	Change Torque Of Screw Tightening: 9~10 kgf/cm -> 14~15 kgf/cm.	Aileen 09/03/20	Lucas 09/03/20	Ray 09/03/20

GTC
DOC.CENTER.ISSUE
SEP.04.2020
ONLY FOR RELEASE

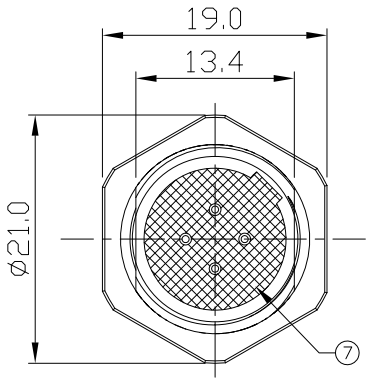

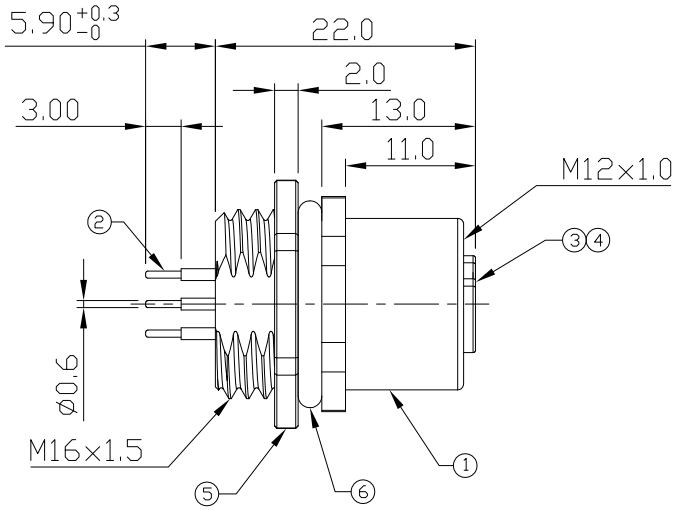

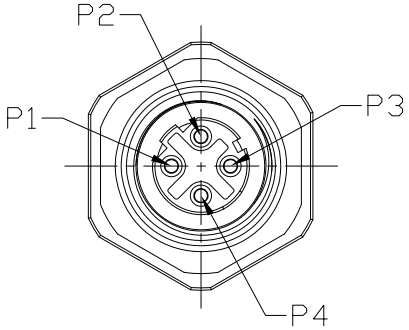

Item	Part Name	Material / Finish	Q'ty
7	Glue	Epoxy Color: Black	
6	O-Ring	Silicone Color: Black	1
5	Hex Nut	Copper Alloy Finish: Ni Plated	1
4	O-Ring	Silicone Color: Red	1
3	Housing	Thermoplastic Color: Black	1
2	Contacts	Copper Alloy Finish: Au Plated	4
1	Metal Body	Copper Alloy Finish: Ni Plated	1

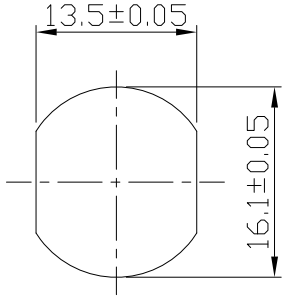

Recommend Panel Cut-Out

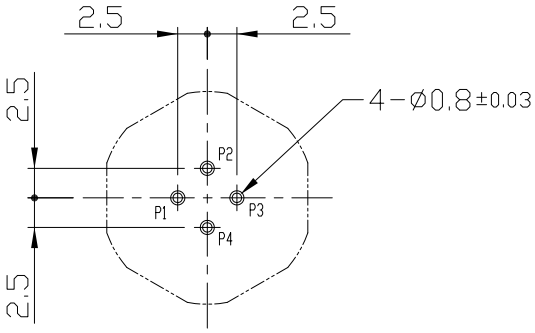

Recommend PCB Layout

TITLE	DRAWING NUMBER	REV.
M12 D-Coding 4A 4P Panel Rear Mount Female Dip	GT234403-12040	02

DO NOT SCALE DRAWINGS	B	N/A	Joyce 02/03/16	Lucas 02/03/16	Ray 02/03/16	X.X ± 0.5 X.XX ± 0.05 X.XXX ± 0.05 ANGLES ± 1°	mm	1/1
THIRD ANGLE PROJECTION	SIZE	SCALE	DRAW / DATE	CHECK / DATE	APPROVE / DATE	TOLERANCES	UNIT	SHEET

GT Contact CO.,LTD

NOTICE OF PROPRIETARY PROPERTY:

THE INFORMATION CONTAINED HEREIN IS THE PROPRIETARY PROPERTY OF GT Contact CO.,LTD THE POSSESSOR AGREES TO THE FOLLOWING:
(i) TO MAINTAIN THIS DOCUMENT IN CONFIDENCE
(ii) NOT TO REPRODUCE OR COPY IT
(iii) NOT TO REVEAL OR PUBLISH IT IN WHOLE OR PART
(iv) ALL RIGHTS RESERVED