REV	ECN#	DESCRIPTION OF REVISION	DRAW BY DATE	CHECK BY DATE	APPROVE BY DATE
01			Lucas 06/16/22	Lucas 06/16/22	Ray 06/16/22

Notes: (Unless Otherwise Specified)

1. Waterproof Rate: IP68.
2. Recommend Panel Thickness: 0.8 To 4.0 mm.
3. Recommend Torque: 9~10 Kgf-cm.
4. Durability: 100 Cycles Min.
5. DWV: 650 Vrms.
6. Rated Voltage: 30V AC/DC.
7. Insulation Resistance: 100 MΩ Min.
8. RoHS Compliant.

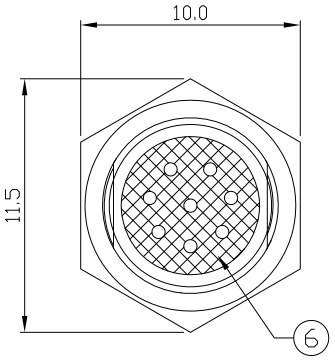

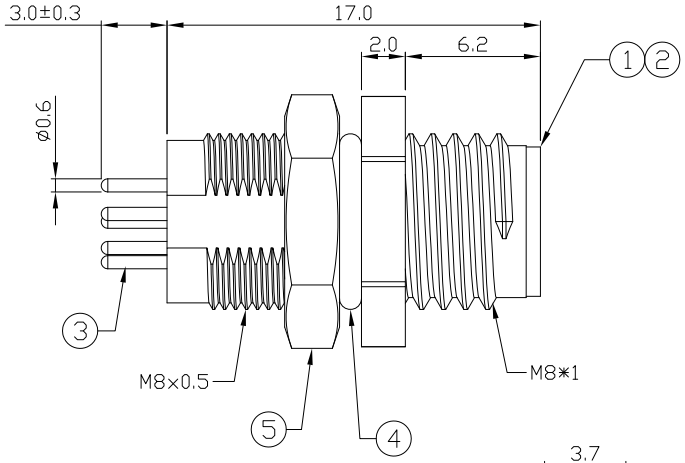

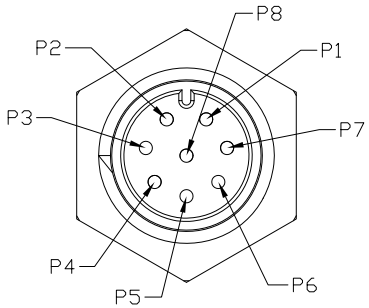

Item	Part Name	Material / Finish	Q'ty
6	Glue	Epoxy Color: Black	
5	Hex Nut	Copper Alloy Finish: Ni Plated	1
4	O-Ring	NBR Color: Black	1
3	Contacts	Copper Alloy Finish: Au Plated	8
2	Housing	Thermoplastic Color: Black	1
1	Metal Body	Copper Alloy Finish: Ni Plated	1

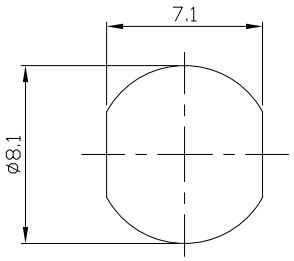

Recommend
Panel Cut-Out

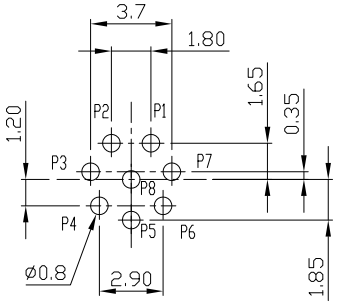

Recommend PCB Layout Component Side

GTC
DOC.CENTER.ISSUE
JUN.24.2022
ONLY FOR RELEASE

TITLE					DRAWING NUMBER	REV.
M8 A-Coding 1.5A 8P Panel Rear Mount Male Dip					GT232113-14080	01
DO NOT SCALE DRAWINGS	B	1:1	Lucas 06/16/22	Lucas 06/16/22	Ray 06/16/22	X.X ± 0.5 X.XX ± 0.2 ANGLES ± 1°	mm	1/1
THIRD ANGLE PROJECTION	SIZE	SCALE	DRAW / DATE	CHECK / DATE	APPROVE / DATE	TOLERANCES	UNIT	SHEET

GT Contact CO.,LTD

NOTICE OF PROPRIETARY PROPERTY:

THE INFORMATION CONTAINED HEREIN IS THE PROPRIETARY PROPERTY OF GT Contact CO.,LTD THE POSSESSOR AGREES TO THE FOLLOWING:
(i) TO MAINTAIN THIS DOCUMENT IN CONFIDENCE
(ii) NOT TO REPRODUCE OR COPY IT
(iii) NOT TO REVEAL OR PUBLISH IT IN WHOLE OR PART
(iv) ALL RIGHTS RESERVED