Notes: (Unless Otherwise Specified)

1. Waterproof Rate: IP68.
2. Recommend Panel Thickness: 0.8 to 5.0 mm.
3. Recommend Torque: 19~20 Kgf-cm.
4. Mating Cap P/N: GT2C215012/GT1C5331X2.
5. RoHS & REACH Compliant.

REV	ECN#	DESCRIPTION OF REVISION	DRAW BY DATE	CHECK BY DATE	APPROVE BY DATE
A0		Mass Production	Joyce 09/30/16	Lucas 09/30/16	Ray 09/30/16

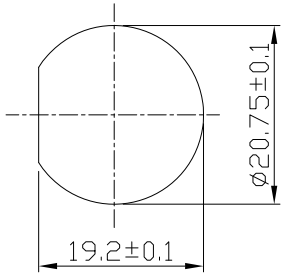

Recommend Panel Cut-Out

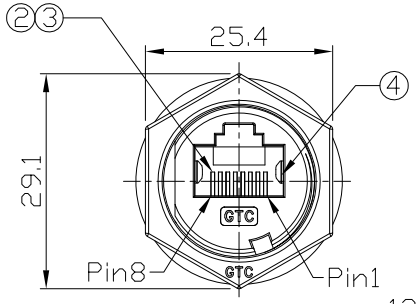

Conn.

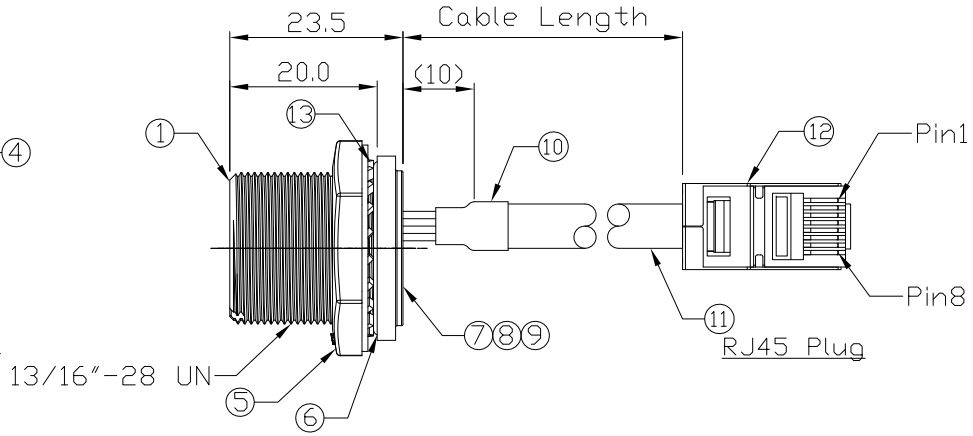

RJ45 Plug

Item	Part Name	Material / Finish	Q'TY
13	Washer	Stainless Finish: —	1
12	RJ45 Plug	Housing: Thermoplastic; Color: Clear Contacts: Copper Alloy; Finish: Au Plated Shell: Cold Roll Steel; Finish: Ni Plated	1
11	Cable	CAT6 26AWG*4P+Al/My+D Color: Black, OD=6.0mm	1
10	Shrink Tube	L=20mm Color: Black	1
9	Glue	Epoxy Color: Black	
8	PCB	FR-4 Color: ——	2
7	Pin Header	Housing: Thermoplastic; Color: Black Contacts: Copper Alloy; Finish: Au Plated	1
6	O-Ring	Silicone Color: Red	1
5	Hex Nut	Zn Alloy Finish: Ni Plated	1
4	EMI Shielded Plate	Copper Alloy Finish: Ni Plated	2
3	Holder	Thermoplastic Color: Black	1
2	RJ45 Receptacle	Housing: Thermoplastic; Color: Gray Contacts: Copper Alloy; Finish: Au Plated	1
1	Housing	Zn Alloy Finish: Ni Plated	1

GTC
DOC.CENTER.ISSUE
OCT.05.2016
ONLY FOR RELEASE

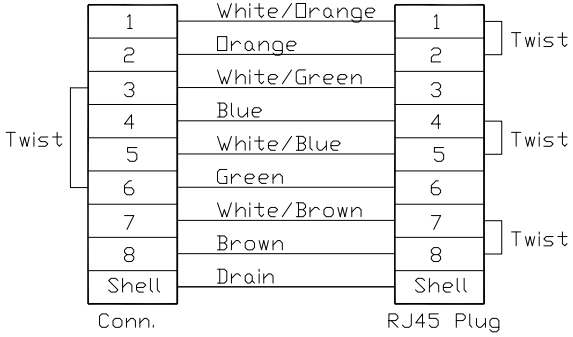

Wiring Diagram

Part No.	Cable Length	Tol.
GT225500-0A-01	1000 mm	+50
GT225500-0A-Z9	900 mm	+50
GT225500-0A-Z8	800 mm	+50
GT225500-0A-Z7	700 mm	+50
GT225500-0A-Z6	600 mm	+50
GT225500-0A-Z5	500 mm	+50
GT225500-0A-Z4	400 mm	+50
GT225500-0A-Z3	300 mm	+25
GT225500-0A-Z2	200 mm	+25
GT225500-0A-Z1	100 mm	+25

GT Contact CO.,LTD

NOTICE OF PROPRIETARY PROPERTY:

THE INFORMATION CONTAINED HEREIN IS THE PROPRIETARY PROPERTY OF GT Contact CO.,LTD THE POSSESSOR AGREES TO THE FOLLOWING:
(i) TO MAINTAIN THIS DOCUMENT IN CONFIDENCE
(ii) NOT TO REPRODUCE OR COPY IT
(iii) NOT TO REVEAL OR PUBLISH IT IN WHOLE OR PART
(iv) ALL RIGHTS RESERVED

TITLE	DRAWING NUMBER	REV.
RJ45 Metal C3 Shielded Panel Jack Screw Inside PCB With CAT6 Cable + RJ Plug	GT225500-0A-XX	A0

DO NOT SCALE DRAWINGS	B	1:1	Joyce 09/30/16	Lucas 09/30/16	Ray 09/30/16	X.X ± 0.5 X.XX ± 0.2 X.XXX ± 0.05 ANGLES ± 1°	mm	1/1
THIRD ANGLE PROJECTION	SIZE	SCALE	DRAW / DATE	CHECK / DATE	APPROVE / DATE	TOLERANCES	UNIT	SHEET